| REVISION HISTORY | | | |
|---|---|---|---|
| REV. | DESCRIPTION | DATE | DRAWN BY |
| 1 | ORIGINAL PRINT | 2/6/2025 | P. YEUNG |

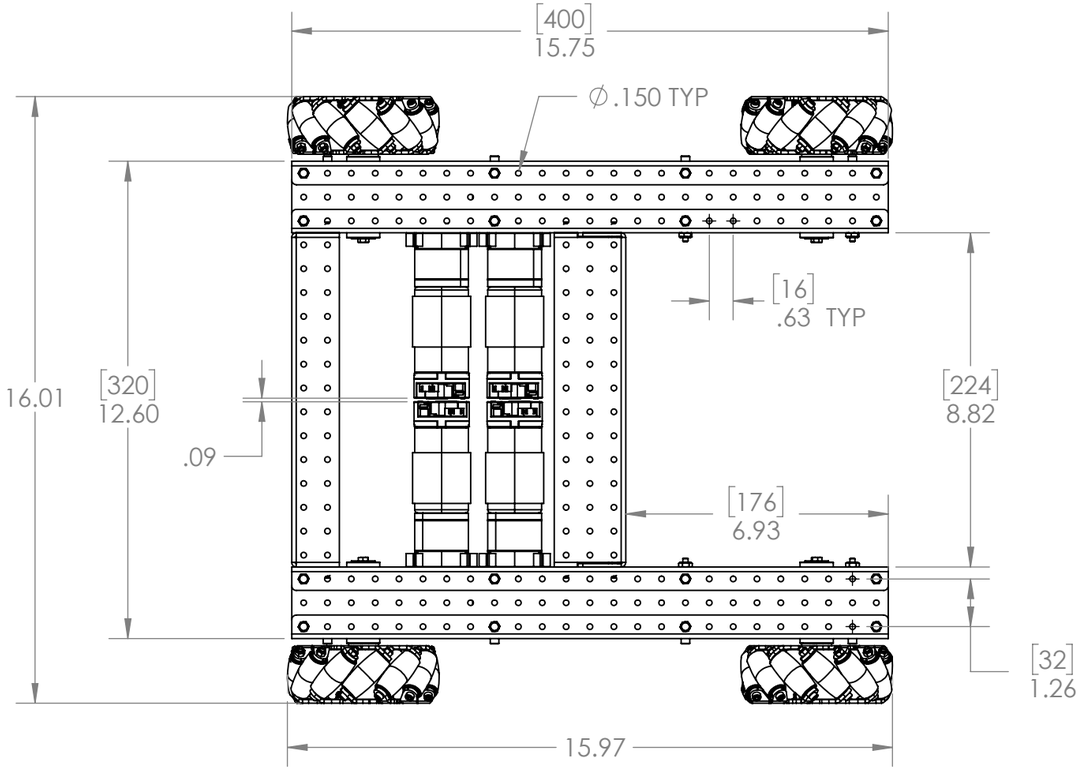


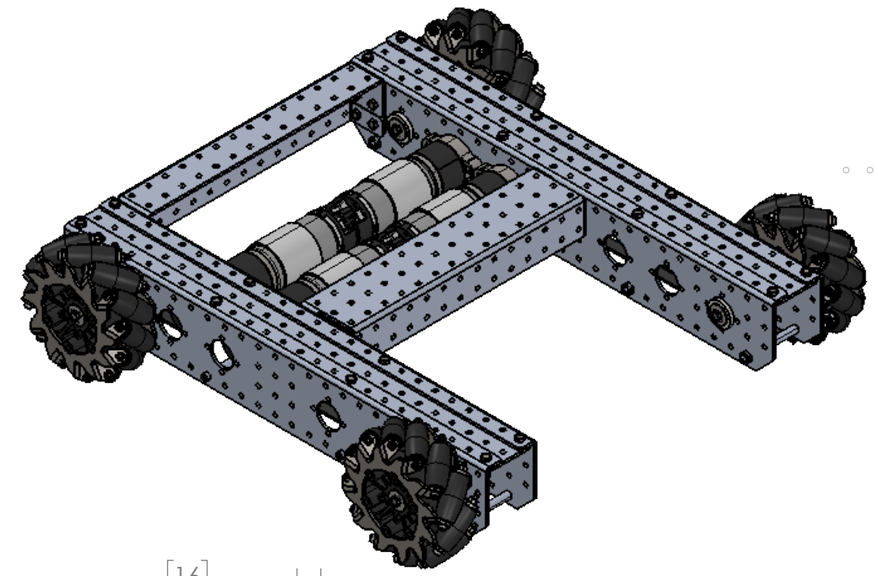

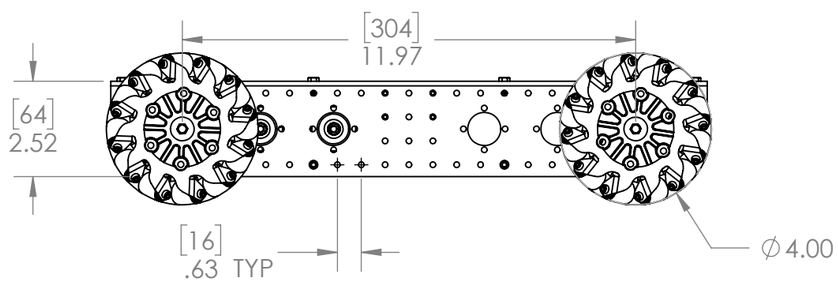


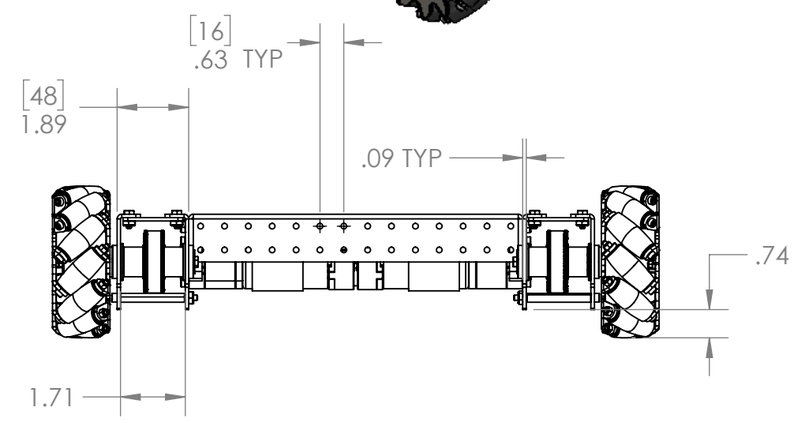


*** SEE CAD FOR ADDITIONAL TOOLPATH INFO***

| UNLESS OTHERWISE SPECIFIED: | | COMMENTS: |
|---|---|---|
| **DIMENSIONS ARE IN INCHES** | | DUAL DIMENSIONS ARE IN MILLIMETERS. |
| TOLERANCES: | | BREAK ALL SHARP EDGES. |
| FRACTIONAL | ±1/16 | |
| ANGULAR: MACH | ±1° | |
| ANGULAR: BEND | ±5° | |
| ONE PLACE DECIMAL | ±0.1 | |
| TWO PLACE DECIMAL | ±0.01 | |
| THREE PLACE DECIMAL | ±0.005 | |
| FOUR PLACE DECIMAL | ±0.0005 | |
| MATERIAL | | |
| FINISH | | |
| DO NOT SCALE DRAWING | | |

| | NAME | DATE |
|---|---|---|
| CHECKED | NM | 2/6/25 |
| ENG APPR. | | |
| MFG APPR. | | |
| Q.A. | | |

AndyMark

TITLE:

# MECANAM LAYOUT (BB MECANUM)

| SIZE | DWG. NO. | REV |
|---|---|---|
| B | BTHMB1N | 1 |

SCALE: 1:4 SHEET 1 OF 1